Work Order ID 74323

Wednesday, September 28, 2011 1:17:32 PM

Item ID: D206-642-541 **Accept** **Setup Start** **Stop**

Revision ID:

Item Name: Replacement Skidtube

Start Date: 9/28/2011 **Start Qty:** 1.00 **Cust Item ID:**

Required Date: 10/7/2011 **Req'd Qty:** 1.00 **Customer:**

Reference:

Run Start **Stop**

Approvals: **Process Plan:** M.L.J **Date:** 11/09/28 **Tooling:** **Date:**

QC: **Date:** **SPC (Y/N):** **Date:**

Sequence ID/ Work Center ID	Operation Description	Set Up/ Run Hours	Tool ID	Tool #	Plan Code	Accept Qty	Reject Qty	Reject Number	Insp. Stamp
100	DOCUMENT CONTROL	0.00							
DC	Memo	0.00							
Document Control	Photocopy bluefile & type labels per PPP D206-642-541		CHG003						

Draw Nbr	Revision Nbr
D3274	D
IIN-D206-642	Rev M

N/A

Dart Aerospace Ltd

W/O:		WORK ORDER CHANGES					
DATE	STEP	PROCEDURE CHANGE	By	Date	Qty	Approval Chief Eng / Prod Mgr	Approval QC Inspector

Part No: _____ **PAR #:** _____ **Fault Category:** _____ **NCR:** Yes No **DQA:** _____ **Date:** _____

Resolution: _____ **Disposition:** _____ **QA: N/C Closed:** _____ **Date:** _____

NCR:		WORK ORDER NON-CONFORMANCE (NCR)						
DATE	STEP	Description of NC Section A	Corrective Action Section B			Verification Section C	Approval Chief Eng	Approval QC Inspector
			Initial Chief Eng	Action Description Chief Eng	Sign & Date			

NOTE: Date & initial all entries

H:\fFORMS\Quality Assurance\approved QA\NCRWO RevE

Work Order ID 74323

Wednesday, September 28, 2011 1:17:32 PM

Item ID: D206-642-541 **Accept** **Setup Start** **Stop**

Revision ID:

Item Name: Replacement Skidtube

Start Date: 9/28/2011 **Start Qty:** 1.00 **Cust Item ID:**

Required Date: 10/7/2011 **Req'd Qty:** 1.00 **Customer:**

Reference:

Run Start **Stop**

Approvals: **Process Plan:** _____ **Date:** _____ **Tooling:** _____ **Date:** _____

QC: _____ **Date:** _____ **SPC (Y/N):** _____ **Date:** _____

Sequence ID/ Work Center ID	Operation Description	Set Up/ Run Hours	Tool ID	Tool #	Plan Code	Accept Qty	Reject Qty	Reject Number	Insp. Stamp
110	Skidtubes	0.00							
Skidtubes		0.00							
Skidtubes									

Memo

****VERIFY AND INSPECT THE MATERIAL PRIOR TO USE****

1- Bend FWD end of tube using bend prog D3274 FWD and foilo 10 as per dwg D3274, cut fwd end of tube with saw table setup D3274. 12-01-13

2- remove fwd indexing ridge as per dwg D3274. Prepare for welding 12/01/27

3- weld fwd cap as per dwg D3274 and QSI004
AR Aluminum Rod Batch: M119712 / M119785 12-01-30

4- grind fwd cap weld on top surface only

5- Cut AFT end of tube at 170.9" as per dwg D3274 and deburr end.

6-Drill Aft cap pilot hole using DT8025

7 -Cleco DT8025 in position and install pilot hole drill Jig DT8742A,B,C,D.
Drill 3/16" pilot holes as per Dwg D3274

8 -Remove inner indexing ridge on aft end of skidtube as per Dwg D3274 scribe batch #

9 -Open aft end cap holes to Ø0.208" as per Dwg D3274. Deburr aft end.

12/02/13

Dart Aerospace Ltd

W/O:		WORK ORDER CHANGES					
DATE	STEP	PROCEDURE CHANGE	By	Date	Qty	Approval Chief Eng / Prod Mgr	Approval QC Inspector

Part No: _____ **PAR #:** _____ **Fault Category:** _____ **NCR:** Yes No **DQA:** _____ **Date:** _____

Resolution: _____ **Disposition:** _____ **QA: N/C Closed:** _____ **Date:** _____

NCR:		WORK ORDER NON-CONFORMANCE (NCR)						
DATE	STEP	Description of NC Section A	Corrective Action Section B			Verification Section C	Approval Chief Eng	Approval QC Inspector
			Initial Chief Eng	Action Description Chief Eng	Sign & Date			

NOTE: Date & initial all entries

H:\fFORMS\Quality Assurance\approved QA\NCRWO RevE

Work Order ID 74323

Wednesday, September 28, 2011 1:17:32 PM

Item ID: D206-642-541 **Accept** **Setup Start** **Stop**

Revision ID:

Item Name: Replacement Skidtube

Start Date: 9/28/2011 **Start Qty:** 1.00 **Cust Item ID:**

Required Date: 10/7/2011 **Req'd Qty:** 1.00 **Customer:**

Reference:

Run Start **Stop**

Approvals: **Process Plan:** _____ **Date:** _____ **Tooling:** _____ **Date:** _____

QC: _____ **Date:** _____ **SPC (Y/N):** _____ **Date:** _____

Sequence ID/ Work Center ID	Operation Description	Set Up/ Run Hours	Tool ID	Tool #	Plan Code	Accept Qty	Reject Qty	Reject Number	Insp. Stamp
114	QC5- Inspect part completeness to step on W/O	0.00							
QC	Memo	0.00	5/12/02/14						
Quality Control									
116	QC10- Inspect visual per QSI004- ground welds	0.00							
QC	Memo	0.00	5/12/02/14						
Quality Control									
120	Chemical Conversion Coat per QSI005 4.1	0.00							
HandFinish	Memo	0.00							
Hand Finishing									

12-02-14

Dart Aerospace Ltd

W/O:		WORK ORDER CHANGES					
DATE	STEP	PROCEDURE CHANGE	By	Date	Qty	Approval Chief Eng / Prod Mgr.	Approval QC Inspector

Part No: _____ **PAR #:** _____ **Fault Category:** _____ **NCR:** Yes No **DQA:** _____ **Date:** _____

Resolution: _____ **Disposition:** _____ **QA: N/C Closed:** _____ **Date:** _____

NCR:		WORK ORDER NON-CONFORMANCE (NCR)						
DATE	STEP	Description of NC Section A	Corrective Action Section B			Verification Section C	Approval Chief Eng	Approval QC Inspector
			Initial Chief Eng	Action Description Chief Eng	Sign & Date			

NOTE: Date & initial all entries

H:\fFORMS\Quality Assurance\approved QA\NCRWO RevE

Work Order ID 74323

Wednesday, September 28, 2011 1:17:32 PM

Item ID: D206-642-541 **Accept** **Setup** **Start** **Stop**

Revision ID:

Item Name: Replacement Skidtube

Start Date: 9/28/2011 **Start Qty:** 1.00 **Cust Item ID:**

Required Date: 10/7/2011 **Req'd Qty:** 1.00 **Customer:**

Reference:

Run **Start** **Stop**

Approvals: **Process Plan:** _____ **Date:** _____ **Tooling:** _____ **Date:** _____

QC: _____ **Date:** _____ **SPC (Y/N):** _____ **Date:** _____

Sequence ID/ Work Center ID	Operation Description	Set Up/ Run Hours	Tool ID	Tool #	Plan Code	Accept Qty	Reject Qty	Reject Number	Insp. Stamp
130	QC3- Inspect Part Finish	0.00				(1)			SAD 12-02-14
QC Quality Control	Memo	0.00							
150	Skidtubes	0.00				(1)			
Skidtubes Skidtubes	Memo	0.00							

1-Open Ø0.313" and 0.375" crossbolt spacer holes as per Dwg D3274

2-Deburr crossbolt spacer holes as per Dwg D3274 and blow out chips from inside the tube

3-Bond web in place as per Dwg D3274 & QSI 015.
A/R□□Sikaflex-291□_____□□
Sikaflex expire date:□ 12-08-13 □ B.M119999
Start:□ 12-02-14 □Time:□ 3:45 □
Finish:□ 12-02-15 □Time:□ 3:45
(Adhere for 12 hours)

Dart Aerospace Ltd

W/O:		WORK ORDER CHANGES					
DATE	STEP	PROCEDURE CHANGE	By	Date	Qty	Approval Chief Eng / Prod Mgr	Approval QC Inspector

Part No: _____ PAR #: _____ Fault Category: _____ NCR: Yes No DQA: _____ Date: _____

Resolution: _____ Disposition: _____ QA: N/C Closed: _____ Date: _____

NCR:		WORK ORDER NON-CONFORMANCE (NCR)						
DATE	STEP	Description of NC Section A	Corrective Action Section B			Verification Section C	Approval Chief Eng	Approval QC Inspector
			Initial Chief Eng	Action Description Chief Eng	Sign & Date			

NOTE: Date & initial all entries

H:\FORMS\Quality Assurance\approved QA\NCRWO RevE

Work Order ID 74323

Wednesday, September 28, 2011 1:17:32 PM

Item ID: D206-642-541 **Accept** **Setup Start**

Revision ID: **Stop**

Item Name: Replacement Skidtube

Start Date: 9/28/2011 **Start Qty:** 1.00 **Cust Item ID:**

Required Date: 10/7/2011 **Req'd Qty:** 1.00 **Customer:**

Reference:

Run Start **Stop**

Approvals: **Process Plan:** _____ **Date:** _____ **Tooling:** _____ **Date:** _____

QC: _____ **Date:** _____ **SPC (Y/N):** _____ **Date:** _____

Sequence ID/ Work Center ID	Operation Description	Set Up/ Run Hours	Tool ID	Tool #	Plan Code	Accept Qty	Reject Qty	Reject Number	Insp. Stamp
160	QC5- Inspect part completeness to step on W/O	0.00				12-2-15			
QC	**Memo**	0.00							
Quality Control									
170		0.00							
Skidtubes	Skidtubes								
Skidtubes	**Memo**	0.00							

1-Bend AFT end of tube using bend prog. D3274 AFT as per dwg D3274. Install drop pins in crossbolt spacer holes to maintain web position. SAD 12-02-15

2- DRILL PILOT HOLES FOR WEARPLATES USING D3274-1T2
OPEN HOLES TO .297" . Deburr

3-DRILL TOE PIN HOLE .640" DIA AS PER DWG USING DT8935 FWD END OF TUBE
DEBURR INSIDE OF HOLE AS NECESSARY (DO NOT ENLARGE HOLES)
REMOVE ANY FOREIGN OBJECTS INSIDE OF TUBES

4- Countersink crossbolt spacer holes as per Dwg D3274

5- prepare for welding

SAD 12-02-16

Dart Aerospace Ltd

W/O:		WORK ORDER CHANGES					
DATE	STEP	PROCEDURE CHANGE	By	Date	Qty	Approval Chief Eng / Prod Mgr	Approval QC Inspector

Part No: _____ **PAR #:** _____ **Fault Category:** _____ **NCR:** Yes No **DQA:** _____ **Date:** _____

Resolution: _____ **Disposition:** _____ **QA: N/C Closed:** _____ **Date:** _____

NCR:		WORK ORDER NON-CONFORMANCE (NCR)						
DATE	STEP	Description of NC Section A	Corrective Action Section B			Verification Section C	Approval Chief Eng	Approval QC Inspector
			Initial Chief Eng	Action Description Chief Eng	Sign & Date			

NOTE: Date & initial all entries

H:\fFORMS\Quality Assurance\approved QA\NCRWO RevE

Work Order ID 74323

Wednesday, September 28, 2011 1:17:32 PM

Item ID: D206-642-541 **Accept** **Setup Start**

Revision ID: **Stop**

Item Name: Replacement Skidtube

Start Date: 9/28/2011 **Start Qty:** 1.00 **Cust Item ID:**

Required Date: 10/7/2011 **Req'd Qty:** 1.00 **Customer:**

Reference:

Run Start

Approvals: **Process Plan:** _____ **Date:** _____ **Tooling:** _____ **Date:** _____ **Stop**

QC: _____ **Date:** _____ **SPC (Y/N):** _____ **Date:** _____

Sequence ID/ Work Center ID	Operation Description	Set Up/ Run Hours	Tool ID	Tool #	Plan Code	Accept Qty	Reject Qty	Reject Number	Insp. Stamp
180	QC5- Inspect part completeness to step on W/O	0.00 4.3° 2.9"				1	Ø	BE 12/02/16	
QC	**Memo**	0.00							
Quality Control									
190		0.00							
Skidtubes	Skidtubes								
Skidtubes	**Memo**	0.00							

1-Insert D2649 & D3275-1 crossbolt spacers. Weld as per QSI 004 and Dwg D3274. Remember to back drill each hole before welding the other side. Use aluminum rod BE 12/02/16

A/R☐☐Aluminum Rod☐ M119785

3-Grind cross bolt welds flush as per Dwg D3274. JB 12/02/17

4-Counterbore 5/16" x 0.750" deep as per Dwg D3274 and deburr. DP 12-2-21

Dart Aerospace Ltd

W/O:		WORK ORDER CHANGES					
DATE	STEP	PROCEDURE CHANGE	By	Date	Qty	Approval Chief Eng / Prod Mgr	Approval QC Inspector

Part No: _____ **PAR #:** _____ **Fault Category:** _____ **NCR:** Yes No **DQA:** _____ **Date:** _____

Resolution: _____ **Disposition:** _____ **QA: N/C Closed:** _____ **Date:** _____

NCR:		WORK ORDER NON-CONFORMANCE (NCR)						
DATE	STEP	Description of NC Section A	Corrective Action Section B			Verification Section C	Approval Chief Eng	Approval QC Inspector
			Initial Chief Eng	Action Description Chief Eng	Sign & Date			

NOTE: Date & initial all entries

Work Order ID 74323

Wednesday, September 28, 2011 1:17:32 PM

Item ID: D206-642-541 **Accept** **Setup Start**

Revision ID: **Stop**

Item Name: Replacement Skidtube

Start Date: 9/28/2011 **Start Qty:** 1.00 **Cust Item ID:**

Required Date: 10/7/2011 **Req'd Qty:** 1.00 **Customer:**

Reference:

Run Start

Approvals: **Process Plan:** _____ **Date:** _____ **Tooling:** _____ **Date:** _____

Stop

QC: _____ **Date:** _____ **SPC (Y/N):** _____ **Date:** _____

Sequence ID/ Work Center ID	Operation Description	Set Up/ Run Hours	Tool ID	Tool #	Plan Code	Accept Qty	Reject Qty	Reject Number	Insp. Stamp
200	QC5- Inspect part completeness to step on W/O	0.00							
QC	Memo	0.00							
Quality Control									
210	QC10- Inspect visual per QSI004- ground welds	0.00							
QC	Memo	0.00							
Quality Control									
220	Pressure Wash per QSI005 4.3	0.00							
HandFinish	Memo	0.00							
Hand Finishing	Re-alodine tube as per QSI 005 section 4.1.2.1 do not acid etch								

12-02-21

12.02.21

1x

1 Feb. 22/2012

Dart Aerospace Ltd

W/O:		WORK ORDER CHANGES					
DATE	STEP	PROCEDURE CHANGE	By	Date	Qty	Approval Chief Eng / Prod Mgr	Approval QC Inspector

Part No: _____ **PAR #:** _____ **Fault Category:** _____ **NCR:** Yes No **DQA:** _____ **Date:** _____

Resolution: _____ **Disposition:** _____ **QA: N/C Closed:** _____ **Date:** _____

NCR:		WORK ORDER NON-CONFORMANCE (NCR)						
DATE	STEP	Description of NC Section A	Corrective Action Section B			Verification Section C	Approval Chief Eng	Approval QC Inspector
			Initial Chief Eng	Action Description Chief Eng	Sign & Date			

NOTE: Date & initial all entries

H:\fFORMS\Quality Assurance\approved QA\NCRWO RevE

Work Order ID 74323

Wednesday, September 28, 2011 1:17:32 PM

Item ID: D206-642-541 **Accept** **Setup Start** **Stop**

Revision ID:

Item Name: Replacement Skidtube

Start Date: 9/28/2011 **Start Qty:** 1.00 **Cust Item ID:**

Required Date: 10/7/2011 **Req'd Qty:** 1.00 **Customer:**

Reference:

Run Start **Stop**

Approvals: **Process Plan:** _____ **Date:** _____ **Tooling:** _____ **Date:** _____

QC: _____ **Date:** _____ **SPC (Y/N):** _____ **Date:** _____

Sequence ID/ Work Center ID	Operation Description	Set Up/ Run Hours	Tool ID	Tool #	Plan Code	Accept Qty	Reject Qty	Reject Number	Insp. Stamp
230	White Gloss(Ref:4.3.5.1) per QSI005 4.3-Alum	0.00				1X	~~Ø~~	~~m~~	~~f~~ 12/02/22
Powdercoat	**Memo**	0.00							
Powder Coating	START TIME: 10:30 OVEN TEMPERATURE: 320°F FINISH TIME: 11:00								
M119480									
240	QC3- Inspect Part Finish	0.00				1	~~ϕ~~	~~M~~	12/02/23
QC	**Memo**	0.00							
Quality Control									
250	HandFinishing	0.00				1	~~ϕ~~	~~M~~	12/02/23
HandFinish	**Memo**	0.00							
Hand Finishing	1-Install Nut Plate as per Dwg D3274. Apply LPS-3 to Nut Plate and rivets. A/R☐N/A☐LPS-3☐ M114596 2-Install inserts as per Dwg D3274. Use a drop of Sikaflex inside insert holes a A/R☐☐Sikaflex-291 ☐ M119568 Sikaflex expire date: ☐ 12/08								

Dart Aerospace Ltd

W/O:		WORK ORDER CHANGES					
DATE	STEP	PROCEDURE CHANGE	By	Date	Qty	Approval Chief Eng / Prod Mgr	Approval QC Inspector

Part No: _____ **PAR #:** _____ **Fault Category:** _____ **NCR:** Yes No **DQA:** _____ **Date:** _____

Resolution: _____ **Disposition:** _____ **QA: N/C Closed:** _____ **Date:** _____

NCR:		WORK ORDER NON-CONFORMANCE (NCR)						
DATE	STEP	Description of NC Section A	Corrective Action Section B			Verification Section C	Approval Chief Eng	Approval QC Inspector
			Initial Chief Eng	Action Description Chief Eng	Sign & Date			

NOTE: Date & initial all entries

H:\fFORMS\Quality Assurance\approved QA\NCRWO RevE

Work Order ID 74323

Wednesday, September 28, 2011 1:17:32 PM

Item ID: D206-642-541 **Accept** **Setup Start** **Stop**

Revision ID:

Item Name: Replacement Skidtube

Start Date: 9/28/2011 **Start Qty:** 1.00 **Cust Item ID:**

Required Date: 10/7/2011 **Req'd Qty:** 1.00 **Customer:**

Reference:

Run Start **Stop**

Approvals: **Process Plan:** _____ **Date:** _____ **Tooling:** _____ **Date:** _____

QC: _____ **Date:** _____ **SPC (Y/N):** _____ **Date:** _____

Sequence ID/ Work Center ID	Operation Description	Set Up/ Run Hours	Tool ID	Tool #	Plan Code	Accept Qty	Reject Qty	Reject Number	Insp. Stamp
260	QC5- Inspect part completeness to step on W/O	0.00				1			BR 12-2-23.
QC Quality Control	**Memo** Inspect Nut Plate & Inserts	0.00							
270	HAND FINISHING RESOURCE #1	0.00				1	0		11 a/o 1/23
HandFinish Hand Finishing	**Memo** 1-Install wearpads & gaskets as per Dwg D3274.	0.00							

2-Install ring as per Dwg D3274
A/R☐☐Sikaflex-291 ☐ M11145 08
Sikaflex expire date: ☐ 12/08

3-Inspect for foreign objects as per QSI 024

4-Spray inside of tube on both sides of web with LPS-3
A/R LPS-3 Batch: M11145 96

5-Install Aft Cap and seal with Sikaflex. Clean excess adhesive.
A/R☐☐Sikaflex-291 ☐ M11145 68
Sikaflex expire date: ☐ 12/08

Dart Aerospace Ltd

W/O:		WORK ORDER CHANGES					
DATE	STEP	PROCEDURE CHANGE	By	Date	Qty	Approval Chief Eng / Prod Mgr	Approval QC Inspector

Part No: _____ **PAR #:** _____ **Fault Category:** _____ **NCR:** Yes No **DQA:** _____ **Date:** _____

Resolution: _____ **Disposition:** _____ **QA: N/C Closed:** _____ **Date:** _____

NCR:		WORK ORDER NON-CONFORMANCE (NCR)						
DATE	STEP	Description of NC Section A	Corrective Action Section B			Verification Section C	Approval Chief Eng	Approval QC Inspector
			Initial Chief Eng	Action Description Chief Eng	Sign & Date			

NOTE: Date & initial all entries

H:\fFORMS\Quality Assurance\approved QA\NCRWO RevE

Work Order ID 74323

Wednesday, September 28, 2011 1:17:32 PM

Item ID: D206-642-541 **Accept** **Setup Start** **Stop**

Revision ID:

Item Name: Replacement Skidtube

Start Date: 9/28/2011 **Start Qty:** 1.00 **Cust Item ID:**

Required Date: 10/7/2011 **Req'd Qty:** 1.00 **Customer:**

Reference:

Run Start **Stop**

Approvals: **Process Plan:** _____ **Date:** _____ **Tooling:** _____ **Date:** _____

QC: _____ **Date:** _____ **SPC (Y/N):** _____ **Date:** _____

Sequence ID/ Work Center ID	Operation Description	Set Up/ Run Hours	Tool ID	Tool #	Plan Code	Accept Qty	Reject Qty	Reject Number	Insp. Stamp
280	QC5- Inspect part completeness to step on W/O	0.00							
QC	Memo	0.00							
Quality Control									
290	Identify as per dwg & Stock Location:_____	0.00							
Packaging	Memo	0.00							
Packaging									
300	QC21- Final Inspection - Work Order Release	0.00							
QC	Memo	0.00							
Quality Control									

12 · 02 · 24

PP75658 (1x) SP 12-02-24.

12/2/24

NF 12-02-24

Dart Aerospace Ltd

W/O:		WORK ORDER CHANGES					
DATE	STEP	PROCEDURE CHANGE	By	Date	Qty	Approval Chief Eng / Prod Mgr	Approval QC Inspector

Part No: _____ **PAR #:** _____ **Fault Category:** _____ **NCR:** Yes No **DQA:** _____ **Date:** _____

Resolution: _____ **Disposition:** _____ **QA: N/C Closed:** _____ **Date:** _____

NCR:		WORK ORDER NON-CONFORMANCE (NCR)						
DATE	STEP	Description of NC Section A	Corrective Action Section B			Verification Section C	Approval Chief Eng	Approval QC Inspector
			Initial Chief Eng	Action Description Chief Eng	Sign & Date			

NOTE: Date & initial all entries

H:\fFORMS\Quality Assurance\approved QA\NCRWO RevE

Picklist Print

Wednesday, September 28, 2011 1:17:39 PM

Work Order ID: 74323

Parent Item: D206-642-541

Parent Item Name: Replacement Skidtube

Start Date: 9/28/2011 **Required Date:** 10/7/2011

Start Qty: 1.00 **Required Qty:** 1.00

Comments:
IPP Rev:B□05.09.23□Revised per D206-642 Rev. J□KJ/JLM
IPP Rev:C 07-02-23 Added SS Wearplates & Gaskets JLM□
IPP Rev:D 07-12-06 replace NAS1515H3L to D3672-1 DD
IPP Rev:E 08-04-17 as per PAR 08-015 DD verified by:EC
IPP Rev:F 08-06-02 add comment DD verified by:EC
IPP Rev:G 08-10-09 revise details DD verified byEC

Component Item ID/ Item Name	Replacement Item ID	Mfg/ Purch	Bin Item	Primary Location	Last Location	Route Seq ID	Unit of Measure	Qty on Hand	Qty per Kit	Total Qty	Qty Issued	Date Issued	Status
D2600-1-190		Manufactured	No			110	Each	68.4000	1	1			
Extrusion Round 3" 206					76912					BT	12-01-13		
				Location		**Loc Qty**		**Loc Code**					
				HALL		68.4							
					59874	10.4							
					69622	58							
D3285-1		Manufactured	No			110	Each	87.0000	1	1			
Cap											BE 12-01-30		
				Location		**Loc Qty**		**Loc Code**					
				LG002		87							
					52511	40				/			
					52647	47							
D3282-041		Manufactured	No			150	Each	1.0000	1	1			
Float Web (206L/407)					B 74299					(1)	12-02-14		
				Location		**Loc Qty**		**Loc Code**					
				LG		1							
					70050	1							

Dart Aerospace Ltd

W/O:		WORK ORDER CHANGES					
DATE	STEP	PROCEDURE CHANGE	By	Date	Qty	Approval Chief Eng / Prod Mgr	Approval QC Inspector

Part No: _____ **PAR #:** _____ **Fault Category:** _____ **NCR:** Yes No **DQA:** _____ **Date:** _____

Resolution: _____ **Disposition:** _____ **QA: N/C Closed:** _____ **Date:** _____

NCR:		WORK ORDER NON-CONFORMANCE (NCR)						
DATE	STEP	Description of NC Section A	Corrective Action Section B			Verification Section C	Approval Chief Eng	Approval QC Inspector
			Initial Chief Eng	Action Description Chief Eng	Sign & Date			

NOTE: Date & initial all entries

H:\fFORMS\Quality Assurance\approved QA\NCRWO RevE

Picklist Print

Wednesday, September 28, 2011 1:17:39 PM

Work Order ID: 74323

Parent Item: D206-642-541

Parent Item Name: Replacement Skidtube

Start Date: 9/28/2011 **Required Date:** 10/7/2011

Start Qty: 1.00 **Required Qty:** 1.00

D2649	Manufactured	No	190	Each	1,959.000	12	12	BE 12/02/16 B 78019 ×12

Cross Bolt Spacer

Location	Loc Qty	Loc Code	
LG	736		
68224	2		
71355	2		
72704	2		
72841	130		
73855	600		
LG001	1223		
65317	1		
68507	11		
73390	35		
73857	576		
73860	600		

D3275-1	Manufactured	No	190	Each	296.0000	12	12	BE 12/02/16

Crossbolt Spacer

Location	Loc Qty	Loc Code	
LG	30		
72123	30		
LG002	266		
66930	106		
73393	160		12

Dart Aerospace Ltd

W/O:		WORK ORDER CHANGES					
DATE	STEP	PROCEDURE CHANGE	By	Date	Qty	Approval Chief Eng / Prod Mgr	Approval QC Inspector

Part No: _____ **PAR #:** _____ **Fault Category:** _____ **NCR:** Yes No **DQA:** _____ **Date:** _____

Resolution: _____ **Disposition:** _____ **QA: N/C Closed:** _____ **Date:** _____

NCR:		WORK ORDER NON-CONFORMANCE (NCR)						
DATE	STEP	Description of NC Section A	Corrective Action Section B			Verification Section C	Approval Chief Eng	Approval QC Inspector
			Initial Chief Eng	Action Description Chief Eng	Sign & Date			

NOTE: Date & initial all entries

H:\fFORMS\Quality Assurance\approved QA\NCRWO RevE

Picklist Print

Wednesday, September 28, 2011 1:17:39 PM

Work Order ID: 74323

Parent Item: D206-642-541

Parent Item Name: Replacement Skidtube

Start Date: 9/28/2011 **Required Date:** 10/7/2011

Start Qty: 1.00 **Required Qty:** 1.00

CR3212-4-03 Cherry Rivet	Purchased	No	250	Each	2,114.000	2	2	M 12/02/23

Location		Loc Qty	Loc Code	
FP-B		2		
	110139	2		
ST311		1112		
	114859	1112		X2
ST318		1000		
	119017	1000		

D3415-041 Nut Plate	Manufactured	No	250	Each	44.0000	1	1	M 12/02/23

Location		Loc Qty	Loc Code	
ST053		44		
	67605	44		X1

CCR264SS3-3 Cherry Rivet	Purchased	No	250	Each	1,399.000	2	2	M 12/02/23

Location		Loc Qty	Loc Code	
FP-B		2		
	113973	2		
ST311		397		
	117086	19		
	117849	378		
ST317		1000		X2
	119017	1000		

Dart Aerospace Ltd

W/O:		WORK ORDER CHANGES					
DATE	STEP	PROCEDURE CHANGE	By	Date	Qty	Approval Chief Eng / Prod Mgr	Approval QC Inspector

Part No: _____ **PAR #:** _____ **Fault Category:** _____ **NCR:** Yes No **DQA:** _____ **Date:** _____

Resolution: _____ **Disposition:** _____ **QA: N/C Closed:** _____ **Date:** _____

NCR:		WORK ORDER NON-CONFORMANCE (NCR)						
DATE	STEP	Description of NC Section A	Corrective Action Section B			Verification Section C	Approval Chief Eng	Approval QC Inspector
			Initial Chief Eng	Action Description Chief Eng	Sign & Date			

NOTE: Date & initial all entries

H:\fFORMS\Quality Assurance\approved QA\NCRWO RevE

Picklist Print

Wednesday, September 28, 2011 1:17:39 PM

Work Order ID: 74323

Parent Item: D206-642-541

Parent Item Name: Replacement Skidtube

Start Date: 9/28/2011 **Required Date:** 10/7/2011

Start Qty: 1.00 **Required Qty:** 1.00

ALS4-1032-130	Purchased	No	250	Each	348.0000	78	78	M120410 (x78) M 12/02/23
Insert								

Location		Loc Qty	Loc Code
ST281		288	
	118386	288	
ST282		60	
	117717	10	
	118237	48	
	118312	2	

D3536-15	Manufactured	No	270	Each	16.0000	1	1	B73318 (x1) M 12/02/22
Gasket								

Location		Loc Qty	Loc Code
FP011		16	
	71586	13	
	72881	3	

D3536-23	Manufactured	No	270	Each	12.0000	1	1	B73312 (x1) M 12/02/23
Gasket								

Location		Loc Qty	Loc Code
FP011		12	
	43406	1	
	71579	11	

D3536-35	Manufactured	No	270	Each	15.0000	1	1	B73313 (x1) M 12/02/23
Gasket								

Location		Loc Qty	Loc Code
FP012		15	
	71587	6	
	72882	9	

Dart Aerospace Ltd

W/O:		WORK ORDER CHANGES					
DATE	STEP	PROCEDURE CHANGE	By	Date	Qty	Approval Chief Eng / Prod Mgr	Approval QC Inspector

Part No: _____ **PAR #:** _____ **Fault Category:** _____ **NCR:** Yes No **DQA:** _____ **Date:** _____

Resolution: _____ **Disposition:** _____ **QA: N/C Closed:** _____ **Date:** _____

NCR:		WORK ORDER NON-CONFORMANCE (NCR)						
DATE	STEP	Description of NC Section A	Corrective Action Section B			Verification Section C	Approval Chief Eng	Approval QC Inspector
			Initial Chief Eng	Action Description Chief Eng	Sign & Date			

NOTE: Date & initial all entries

H:\fFORMS\Quality Assurance\approved QA\NCRWO RevE

Picklist Print

Wednesday, September 28, 2011 1:17:39 PM

Work Order ID: 74323

Parent Item: D206-642-541

Parent Item Name: Replacement Skidtube

Start Date: 9/28/2011 **Required Date:** 10/7/2011

Start Qty: 1.00 **Required Qty:** 1.00

D3536-39	Manufactured	No	270	Each	14.0000	1	1	B73317 (x1) M 12/02/27
Gasket								

Location		Loc Qty	Loc Code	
FP015		14		
	69760	14		

D3535-15	Manufactured	No	270	Each	28.0000	1	1	M 12/02/23
Wearshoe								

Location		Loc Qty	Loc Code	
FP007		25		
	73006	12		
	73315	13		X1
FP018		3		
	69931	3		

D3535-35	Manufactured	No	270	Each	30.0000	1	1	D74509 (x1) M 12/02/23
Wearshoe								

Location		Loc Qty	Loc Code	
FP018		30		
	67598	1		
	70815	3		
	73311	26		

D3535-39	Manufactured	No	270	Each	33.0000	1	1	M 12/02/27
Wearshoe								

Location		Loc Qty	Loc Code	
FP018		33		
	69759	1		
	72159	12		
	73316	20		SL

Dart Aerospace Ltd

W/O:		WORK ORDER CHANGES					
DATE	STEP	PROCEDURE CHANGE	By	Date	Qty	Approval Chief Eng / Prod Mgr	Approval QC Inspector

Part No: _____ **PAR #:** _____ **Fault Category:** _____ **NCR:** Yes No **DQA:** _____ **Date:** _____

Resolution: _____ **Disposition:** _____ **QA: N/C Closed:** _____ **Date:** _____

NCR:		WORK ORDER NON-CONFORMANCE (NCR)						
DATE	STEP	Description of NC Section A	Corrective Action Section B			Verification Section C	Approval Chief Eng	Approval QC Inspector
			Initial Chief Eng	Action Description Chief Eng	Sign & Date			

NOTE: Date & initial all entries

H:\fFORMS\Quality Assurance\approved QA\NCRWO RevE

Picklist Print

Wednesday, September 28, 2011 1:17:39 PM

Work Order ID: 74323

Parent Item: D206-642-541

Parent Item Name: Replacement Skidtube

Start Date: 9/28/2011 **Required Date:** 10/7/2011

Start Qty: 1.00 **Required Qty:** 1.00

D3535-23	Manufactured	No	270	Each	38.0000	1	1	
Wearshoe								ML 12/02/23

Location	Loc Qty	Loc Code
FP021	38	
70818	2	
71581	10	
73314	26	x 1

D3537-3	Manufactured	No	270	Each	33.0000	1	1	
Wearpad								B74500 (x1) ML 12/02/23

Location	Loc Qty	Loc Code
FP	4	
70481	4	
FP002	14	
73305	14	
FP017	15	
35697	1	
72144	10	
72686	4	

D3537-1	Manufactured	No	270	Each	168.0000	9	9	
Wearpad								B78592 (x9) ML 12/02/23

Location	Loc Qty	Loc Code
FP001	161	
72124	41	
73394	60	
73395	60	
FP017	7	
69817	5	
70686	2	

Dart Aerospace Ltd

W/O:		WORK ORDER CHANGES					
DATE	STEP	PROCEDURE CHANGE	By	Date	Qty	Approval Chief Eng / Prod Mgr	Approval QC Inspector

Part No: _____ **PAR #:** _____ **Fault Category:** _____ **NCR:** Yes No **DQA:** _____ **Date:** _____

Resolution: _____ **Disposition:** _____ **QA: N/C Closed:** _____ **Date:** _____

NCR:		WORK ORDER NON-CONFORMANCE (NCR)						
DATE	STEP	Description of NC Section A	Corrective Action Section B			Verification Section C	Approval Chief Eng	Approval QC Inspector
			Initial Chief Eng	Action Description Chief Eng	Sign & Date			

NOTE: Date & initial all entries

H:\fFORMS\Quality Assurance\approved QA\NCRWO RevE

Picklist Print

Wednesday, September 28, 2011 1:17:39 PM

Work Order ID: 74323

Parent Item: D206-642-541

Parent Item Name: Replacement Skidtube

Start Date: 9/28/2011 **Required Date:** 10/7/2011

Start Qty: 1.00 **Required Qty:** 1.00

AN960C10L	NAS1149C0332R	Purchased	No	270	Each	0.0000	80	80	M1120648 (x80) 12/02/23
washer									
AN960C416	NAS1149C0463R	Purchased	No	270	Each	0.0000	1	1	M117735 (x1) 12/02/23
washer									
D3672-1		Manufactured	No	270	Each	1,062.000	2	2	12/02/23
Phenolic Washer									

Location	Loc Qty	Loc Code	
ST074	1060		
64177	86		
66821	474		x2
72229	500		
ST077	2		
52505	2		

AN3C4A		Purchased	No	270	Each	2,728.000	80	80	M1120423 (x80) 12/02/23
BOLT									

Location	Loc Qty	Loc Code	
ST350	2728		
117313	2		
117688	5		
117872	22		
118112	16		
118451	953		
118706	500		
118838	1000		
118983	230		

Dart Aerospace Ltd

W/O:		WORK ORDER CHANGES					
DATE	STEP	PROCEDURE CHANGE	By	Date	Qty	Approval Chief Eng / Prod Mgr	Approval QC Inspector

Part No: _____ **PAR #:** _____ **Fault Category:** _____ **NCR:** Yes No **DQA:** _____ **Date:** _____

Resolution: _____ **Disposition:** _____ **QA: N/C Closed:** _____ **Date:** _____

NCR:		WORK ORDER NON-CONFORMANCE (NCR)						
DATE	STEP	Description of NC Section A	Corrective Action Section B			Verification Section C	Approval Chief Eng	Approval QC Inspector
			Initial Chief Eng	Action Description Chief Eng	Sign & Date			

NOTE: Date & initial all entries

H:\fFORMS\Quality Assurance\approved QA\NCRWO RevE

Picklist Print

Wednesday, September 28, 2011 1:17:39 PM

Work Order ID: 74323

Parent Item: D206-642-541

Parent Item Name: Replacement Skidtube

Start Date: 9/28/2011 **Required Date:** 10/7/2011

Start Qty: 1.00 **Required Qty:** 1.00

AN4C5A BOLT	Purchased	No	270	Each	581.0000	1	1	M 12/02/23

Location		Loc Qty	Loc Code	
FP-B		92		
	112243	92		Y(
ST345		389		
	112243	389		
ST356		100		
	119017	100		

D2646 Aft Cap	Manufactured	No	270	Each	85.0000	1	1	B73825 (x1) M 12/02/23

Location		Loc Qty	Loc Code	
FP004		42		
	68280	42		
FP006		5		
	62678	5		
FP-4		34		
	70945	1		
	71070	33		
fp5		4		
	71038	4		

Dart Aerospace Ltd

W/O:		WORK ORDER CHANGES					
DATE	STEP	PROCEDURE CHANGE	By	Date	Qty	Approval Chief Eng / Prod Mgr	Approval QC Inspector

Part No: _____ **PAR #:** _____ **Fault Category:** _____ **NCR:** Yes No **DQA:** _____ **Date:** _____

Resolution: _____ **Disposition:** _____ **QA: N/C Closed:** _____ **Date:** _____

NCR:		WORK ORDER NON-CONFORMANCE (NCR)						
DATE	STEP	Description of NC Section A	Corrective Action Section B			Verification Section C	Approval Chief Eng	Approval QC Inspector
			Initial Chief Eng	Action Description Chief Eng	Sign & Date			

NOTE: Date & initial all entries

H:\fFORMS\Quality Assurance\approved QA\NCRWO RevE

Picklist Print

Wednesday, September 28, 2011 1:17:39 PM

Work Order ID: 74323

Parent Item: D206-642-541

Parent Item Name: Replacement Skidtube

Start Date: 9/28/2011 **Required Date:** 10/7/2011

Start Qty: 1.00 **Required Qty:** 1.00

D3413-1	Manufactured	No	270	Each	57.0000	1	1	
Ring								1377410 (x1) 11/12/02(2)

Location		Loc Qty	Loc Code	
ST420		17		
	66387	1		
	70773	16		
ST467		40		
	72137	20		
	73298	20		

Dart Aerospace Ltd

W/O:		WORK ORDER CHANGES					
DATE	STEP	PROCEDURE CHANGE	By	Date	Qty	Approval Chief Eng / Prod Mgr	Approval QC Inspector

Part No: _____ **PAR #:** _____ **Fault Category:** _____ **NCR:** Yes No **DQA:** _____ **Date:** _____

Resolution: _____ **Disposition:** _____ **QA: N/C Closed:** _____ **Date:** _____

NCR:		WORK ORDER NON-CONFORMANCE (NCR)						
DATE	STEP	Description of NC Section A	Corrective Action Section B			Verification Section C	Approval Chief Eng	Approval QC Inspector
			Initial Chief Eng	Action Description Chief Eng	Sign & Date			

NOTE: Date & initial all entries

H:\fFORMS\Quality Assurance\approved QA\NCRWO RevE

DESIGN	DRAWN BY	DART AEROSPACE USA, INC. PORT HADLOCK, WA
CP	PH	
CHECKED	APPROVED	DRAWING NO. D3274 — REV. D — SHEET 1 OF 4
DATE 06.12.19		TITLE SKIDTUBE ASSEMBLY — SCALE NTS

A	04.03.15	NEW ISSUE
B	04.08.09	MOVE SADDLE HOLE: 42.14 WAS 42.76
C	05.03.16	ADD −043; NEW INSERTS
D	06.12.19	NEW INSERTS, SS WEARSHOE + GASKET

RELEASED
07.02.12
DEO ATTACHED

Qty -041	Qty -043	Part Number	Description
X		**D3274-041**	**SKIDTUBE ASSEMBLY**
	X	**D3274-043**	**SKIDTUBE ASSEMBLY**
1	1	D2600-1-240	EXTRUSION
1	1	D2646	AFT CAP
12	12	D2649	CROSS BOLT SPACER
12	37	D3275-1	CROSS BOLT SPACER
1	1	D3282-041	FLOAT WEB
1	1	D3285-1	CAP
1	1	D3413-1	RING
1	1	D3415-041	NUT PLATE
1	1	D3535-15	WEARSHOE
1	1	D3535-23	WEARSHOE
1	1	D3535-35	WEARSHOE
1	1	D3535-39	WEARSHOE
1	1	D3536-15	GASKET
1	1	D3536-23	GASKET
1	1	D3536-35	GASKET
1	1	D3536-39	GASKET
9	9	D3537-1	WEARPAD
1	1	D3537-3	WEARPAD
78	78	ALS7-1032-130	INSERT (or AKS4-1032-130, ALS4-1032-130, AELS-1032-130)
80	80	AN3C4A	BOLT
1	1	AN4C5A	BOLT
1	1	AN960C416	WASHER
80	80	AN960C10L	WASHER
2	2	CCR264SS3-3	RIVET
2	2	CR3212-4-03	RIVET
2	2	NAS1515H3L	WASHER

GENERAL NOTES:

1. TOLERANCES ARE PER DART QSI 018 UNLESS OTHERWISE NOTED.
2. DAMAGE TOLERANCE ON FWD BEND:
   THERE SHOULD BE NO VISIBLE WRINKLES IN THE BEND FROM THE GROUND TO A HEIGHT OF 7 INCHES ABOVE THE GROUND. IT IS ACCEPTABLE TO POLISH OUT GOUGES UP TO 0.020 DEEP IN THE BENT PORTION OF THE TUBE. A MAXIMUM REDUCTION IN DIAMETER OF 0.150" IS ACCEPTABLE IN THE BENT PORTION OF THE TUBE.
3. ALL HOLES DRILLED ON CENTERLINES.
4. BOND D3282-041 FLOAT WEB INTO D3274-1/-3 OUTER TUBE WITH NON-STRUCTURAL SIKAFLEX-241/291 ADHESIVE PER DART QSI 015. ENSURE HOLES LINE-UP.
5. WELDING TO BE DONE PER DART QSI 004.
6. FINISH: - ACID ETCH, ALODINE ASSEMBLY PER DART QSI 005 4.1
   - POWDER COAT WHITE (REF. 4.3.5.1) PER DART QSI 005 4.3
7. DRILL Ø0.297 HOLES FOR ALS7-1032-130 INSERTS USING DT3274-1T2 BEFORE FINISH. INSTALL ALS7-1032-130 INSERTS AFTER FINISH. SEAL WEARSHOE BOLTS WITH SIKAFLEX -241/-291.
8. SPRAY INSIDE OF TUBE WITH A COAT OF LPS LABORATORIES "LPS-3" AFTER FINISH AND INSTALLATION OF INSERTS. COAT ALL EXPOSED FASTENERS WITH LPS LABORATORIES "LPS PROCYON" AFTER FINAL ASSEMBLY, CLEAN EXCESS OFF POWDER COATING WITH MEK DEGREASER.

Copyright © 2004 by DART AEROSPACE USA, INC.
THIS DOCUMENT IS PRIVATE AND CONFIDENTIAL AND IS SUPPLIED ON THE EXPRESS CONDITION THAT IT IS NOT TO BE USED FOR ANY PURPOSE OR COPIED OR COMMUNICATED TO ANY OTHER PERSON WITHOUT WRITTEN PERMISSION FROM DART AEROSPACE USA, INC.

Dart Aerospace Ltd

W/O:		WORK ORDER CHANGES					
DATE	STEP	PROCEDURE CHANGE	By	Date	Qty	Approval Chief Eng / Prod Mgr	Approval QC Inspector

Part No: _____ PAR #: _____ Fault Category: _____ NCR: Yes No DQA: _____ Date: _____

Resolution: _____ Disposition: _____ QA: N/C Closed: _____ Date: _____

NCR:		WORK ORDER NON-CONFORMANCE (NCR)						
DATE	STEP	Description of NC Section A	Corrective Action Section B			Verification Section C	Approval Chief Eng	Approval QC Inspector
			Initial Chief Eng	Action Description Chief Eng	Sign & Date			

NOTE: Date & initial all entries

H:\FORMS\Quality Assurance\approved QA\NCRWO RevE

DEO ATTACHED

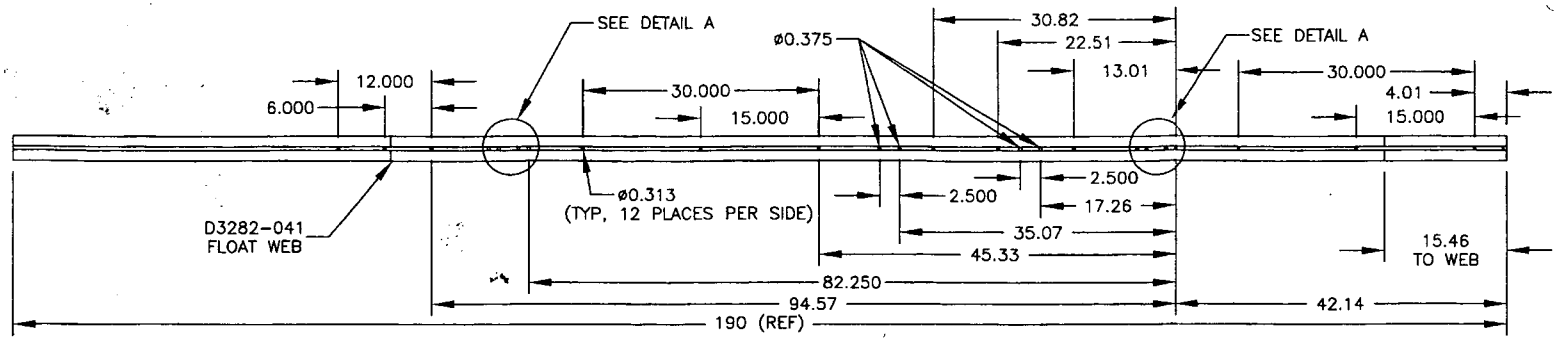

D3274-041 DRILLING/ASSEMBLY DETAIL

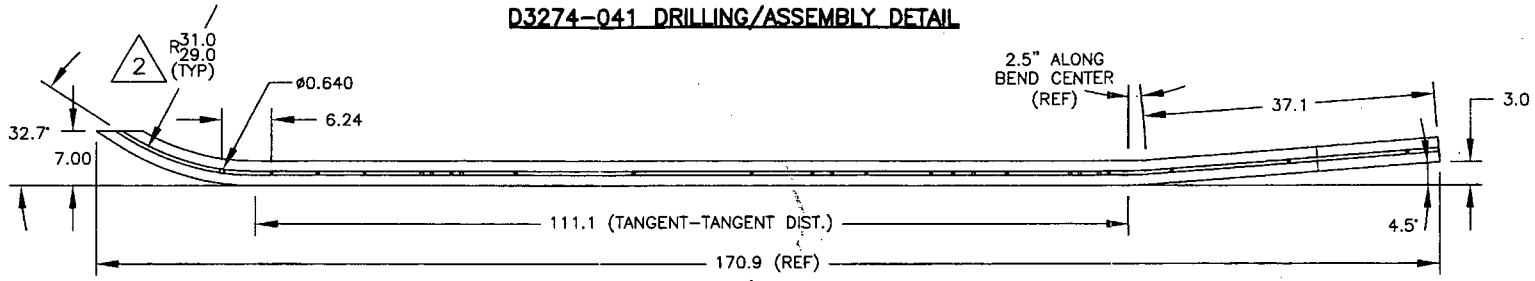

D3274-041 BEND/DRILLING DETAIL

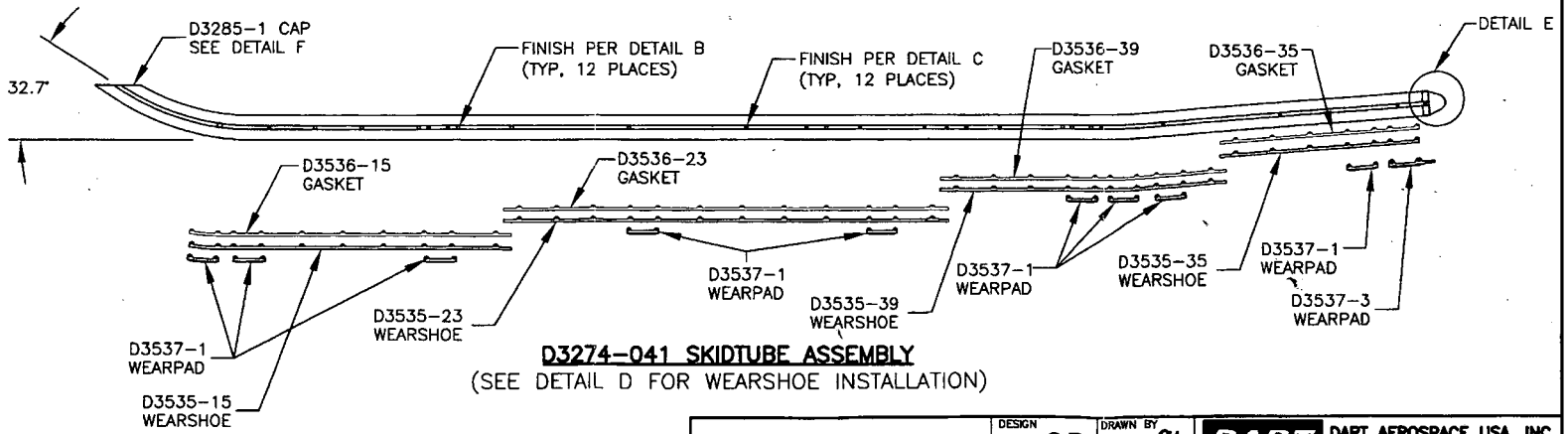

D3274-041 SKIDTUBE ASSEMBLY
(SEE DETAIL D FOR WEARSHOE INSTALLATION)

SHOP COPY
RETURN TO
ENGINEERING
UNCONTROLLED COPY
SUBJECT TO AMENDMENT
WITHOUT NOTICE
WORK ORDER
NO. 74323
M.L.J 11/09/28

RELEASED
07.02.12

COPYRIGHT © 2004 BY DART AEROSPACE USA, INC.
THIS DOCUMENT IS PRIVATE AND CONFIDENTIAL AND IS SUPPLIED ON THE EXPRESS CONDITION THAT IT IS NOT TO BE USED FOR ANY PURPOSE OR COPIED OR COMMUNICATED TO ANY OTHER PERSON WITHOUT WRITTEN PERMISSION FROM DART AEROSPACE USA, INC.

DESIGN CP	DRAWN BY	DART	DART AEROSPACE USA, INC. PORT HADLOCK, WA
CHECKED	APPROVED	DRAWING NO. D3274	REV. D SHEET 2 OF 4
DATE 06.12.19		TITLE SKIDTUBE ASSEMBLY	SCALE 1:15

Dart Aerospace Ltd

W/O:		WORK ORDER CHANGES					
DATE	STEP	PROCEDURE CHANGE	By	Date	Qty	Approval Chief Eng / Prod Mgr	Approval QC Inspector

Part No: _____ **PAR #:** _____ **Fault Category:** _____ **NCR:** Yes No **DQA:** _____ **Date:** _____

Resolution: _____ **Disposition:** _____ **QA: N/C Closed:** _____ **Date:** _____

NCR:		WORK ORDER NON-CONFORMANCE (NCR)						
DATE	STEP	Description of NC Section A	Corrective Action Section B			Verification Section C	Approval Chief Eng	Approval QC Inspector
			Initial Chief Eng	Action Description Chief Eng	Sign & Date			

NOTE: Date & initial all entries

H:\fFORMS\Quality Assurance\approved QA\NCRWO RevE

74323

DEO ATTACHED

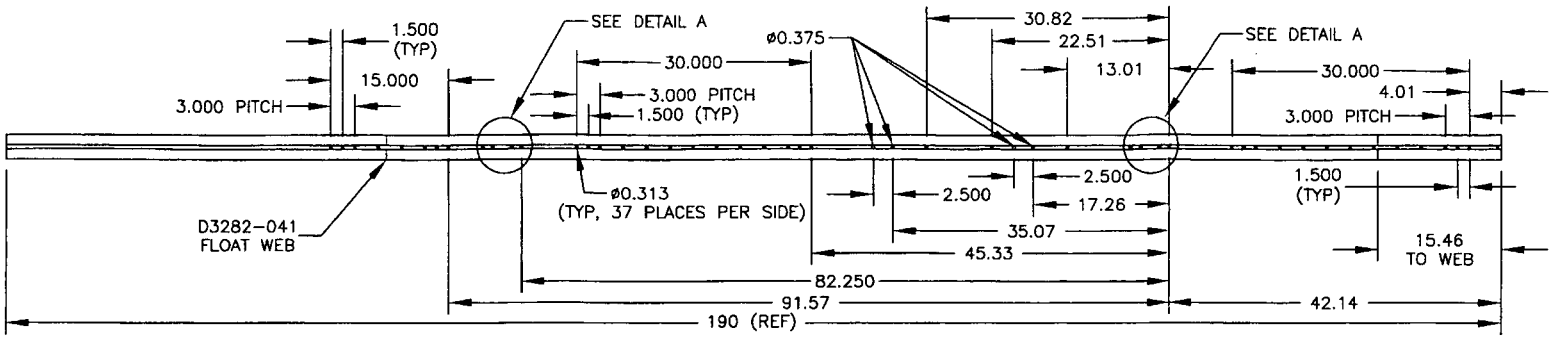

D3274-043 DRILLING/ASSEMBLY DETAIL

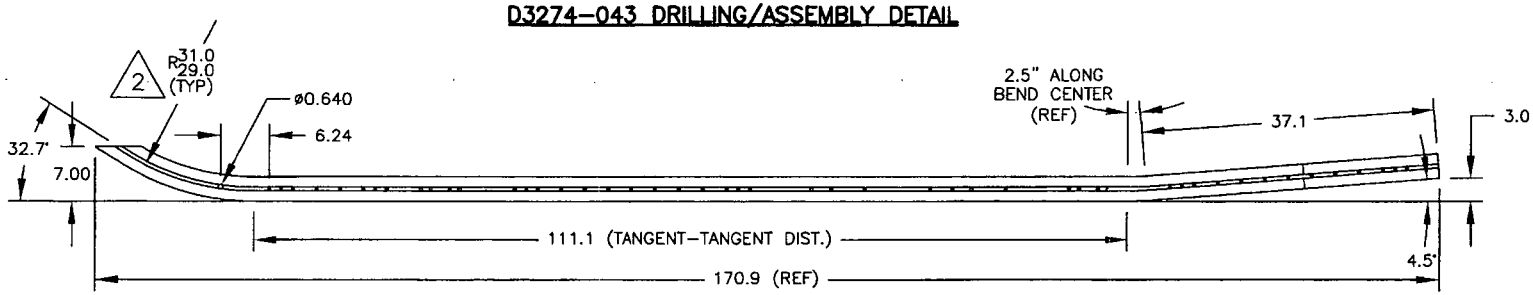

D3274-043 BEND/DRILLING DETAIL

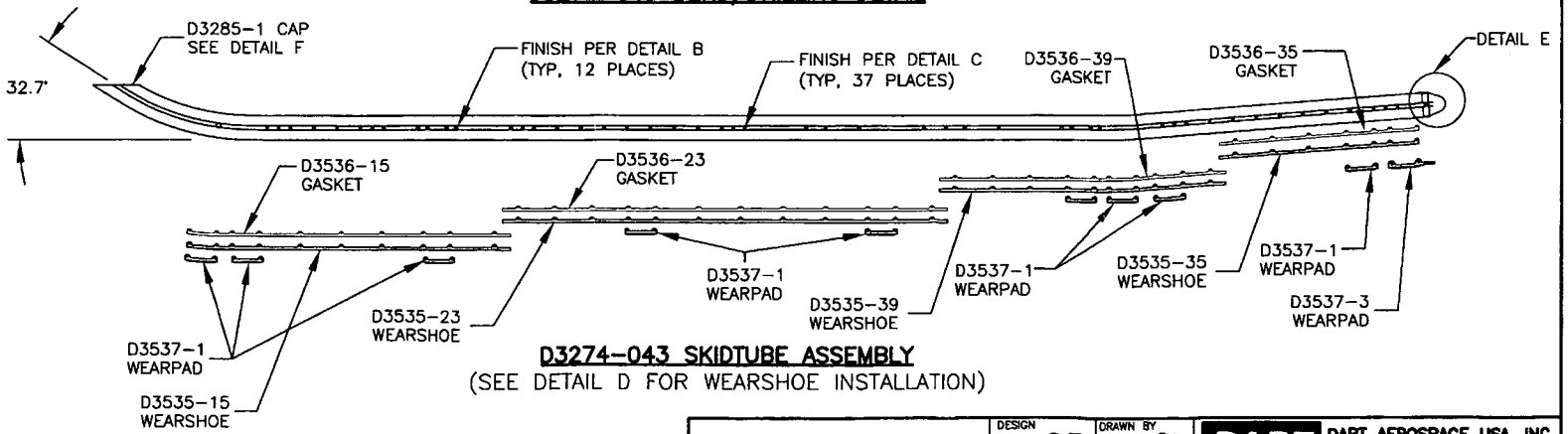

D3274-043 SKIDTUBE ASSEMBLY

(SEE DETAIL D FOR WEARSHOE INSTALLATION)

RELEASED
07.02.12

COPYRIGHT © 2004 BY DART AEROSPACE USA, INC.

THIS DOCUMENT IS PRIVATE AND CONFIDENTIAL AND IS SUPPLIED ON THE EXPRESS CONDITION THAT IT IS NOT TO BE USED FOR ANY PURPOSE OR COPIED OR COMMUNICATED TO ANY OTHER PERSON WITHOUT WRITTEN PERMISSION FROM DART AEROSPACE USA, INC.

DESIGN CP	DRAWN BY PH	DART	DART AEROSPACE USA, INC. PORT HADLOCK, WA
CHECKED	APPROVED	DRAWING NO. D3274	REV. D SHEET 3 OF 4
DATE 06.12.19		TITLE SKIDTUBE ASSEMBLY	SCALE 1:15

Dart Aerospace Ltd

W/O:		WORK ORDER CHANGES					
DATE	STEP	PROCEDURE CHANGE	By	Date	Qty	Approval Chief Eng / Prod Mgr	Approval QC Inspector

Part No: _____ **PAR #:** _____ **Fault Category:** _____ **NCR:** Yes No **DQA:** _____ **Date:** _____

Resolution: _____ **Disposition:** _____ **QA: N/C Closed:** _____ **Date:** _____

NCR:		WORK ORDER NON-CONFORMANCE (NCR)						
DATE	STEP	Description of NC Section A	Corrective Action Section B			Verification Section C	Approval Chief Eng	Approval QC Inspector
			Initial Chief Eng	Action Description Chief Eng	Sign & Date			

NOTE: Date & initial all entries

H:\fFORMS\Quality Assurance\approved QA\NCRWO RevE

74323

DETAIL A: DRILL DETAIL

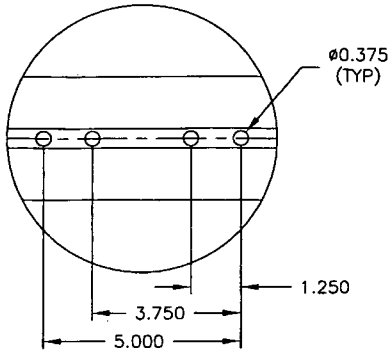

DETAIL B
FOR ø0.375 HOLES ONLY

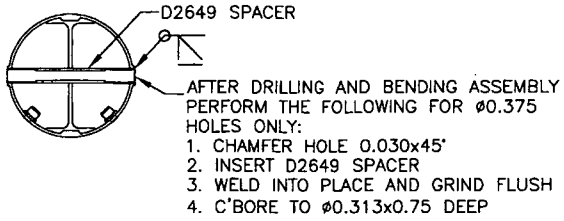

DETAIL C
FOR ø0.313 HOLES ONLY

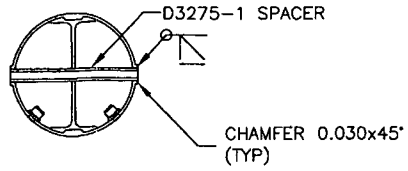

DETAIL D

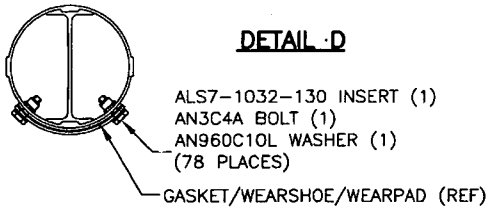

DETAIL F: END FINISHING DETAIL

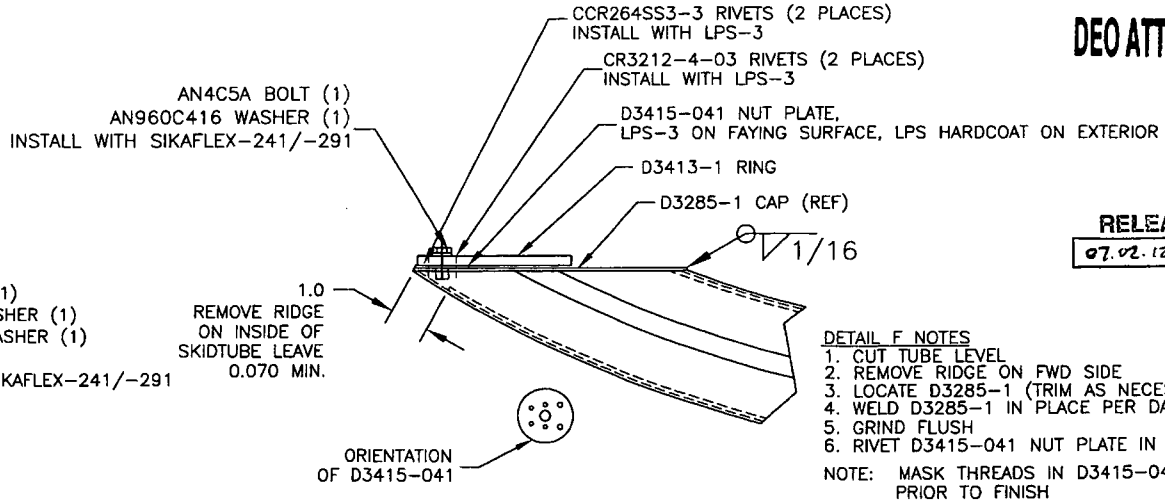

DEO ATTACHED

RELEASED
07.02.12

DETAIL F NOTES
1. CUT TUBE LEVEL
2. REMOVE RIDGE ON FWD SIDE
3. LOCATE D3285-1 (TRIM AS NECESSARY)
4. WELD D3285-1 IN PLACE PER DART QSI 004
5. GRIND FLUSH
6. RIVET D3415-041 NUT PLATE IN PLACE

NOTE: MASK THREADS IN D3415-041 PRIOR TO FINISH

DETAIL E

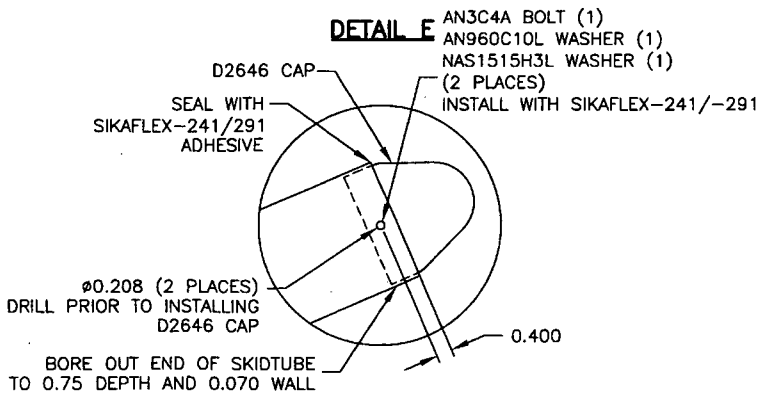

COPYRIGHT © 2004 BY DART AEROSPACE USA, INC.

THIS DOCUMENT IS PRIVATE AND CONFIDENTIAL AND IS SUPPLIED ON THE EXPRESS CONDITION THAT IT IS NOT TO BE USED FOR ANY PURPOSE OR COPIED OR COMMUNICATED TO ANY OTHER PERSON WITHOUT WRITTEN PERMISSION FROM DART AEROSPACE USA, INC.

DESIGN: CP	DRAWN BY: PH	DART AEROSPACE USA, INC. PORT HADLOCK, WA	
CHECKED: H	APPROVED: H	DRAWING NO. D3274	REV. D SHEET 4 OF 4
DATE: 06.12.19		TITLE: SKIDTUBE ASSEMBLY	SCALE 1:3

Dart Aerospace Ltd

W/O:		WORK ORDER CHANGES					
DATE	STEP	PROCEDURE CHANGE	By	Date	Qty	Approval Chief Eng / Prod Mgr	Approval QC Inspector

Part No: _____ **PAR #:** _____ **Fault Category:** _____ **NCR:** Yes No **DQA:** _____ **Date:** _____

Resolution: _____ **Disposition:** _____ **QA: N/C Closed:** _____ **Date:** _____

NCR:		WORK ORDER NON-CONFORMANCE (NCR)						
DATE	STEP	Description of NC Section A	Corrective Action Section B			Verification Section C	Approval Chief Eng	Approval QC Inspector
			Initial Chief Eng	Action Description Chief Eng	Sign & Date			

NOTE: Date & initial all entries

H:\fFORMS\Quality Assurance\approved QA\NCRWO RevE

74323

DRAWING NO.	TITLE	REV. D	DART AEROSPACE USA, INC ENGINEERING ORDER	D.E.O. NO.	SHEET NO.	SCALE
D3274	SKIDTUBE ASSEMBLY			D3274-D-1	SHEET 1 OF 1	NTS

DRAWN	CHECKED	MFG. APPR.	APPROVED	DE APPR.
DATE 09.06.17	DATE 09.06.23	DATE 09/06/23	DATE 09/06/23	DATE 09.06.23

LPS-3 IS NO LONGER USED DURING ASSEMBLY OF SKIDTUBE.

AMEND NOTE 8: "~~SPRAY INSIDE OF TUBE WITH A COAT OF LPS LABORATORIES 'LPS 3' AFTER FINISH AND INSTALLATION OF INSERTS.~~ COAT ALL EXPOSED FASTENERS WITH LPS LABORATORIES 'LPS PROCYON' AFTER FINAL ASSEMBLY, CLEAN EXCESS OFF POWDER COATING WITH MEK DEGREASER."

AMEND DETAIL F AS SHOWN:

DETAIL F: END FINISHING DETAIL

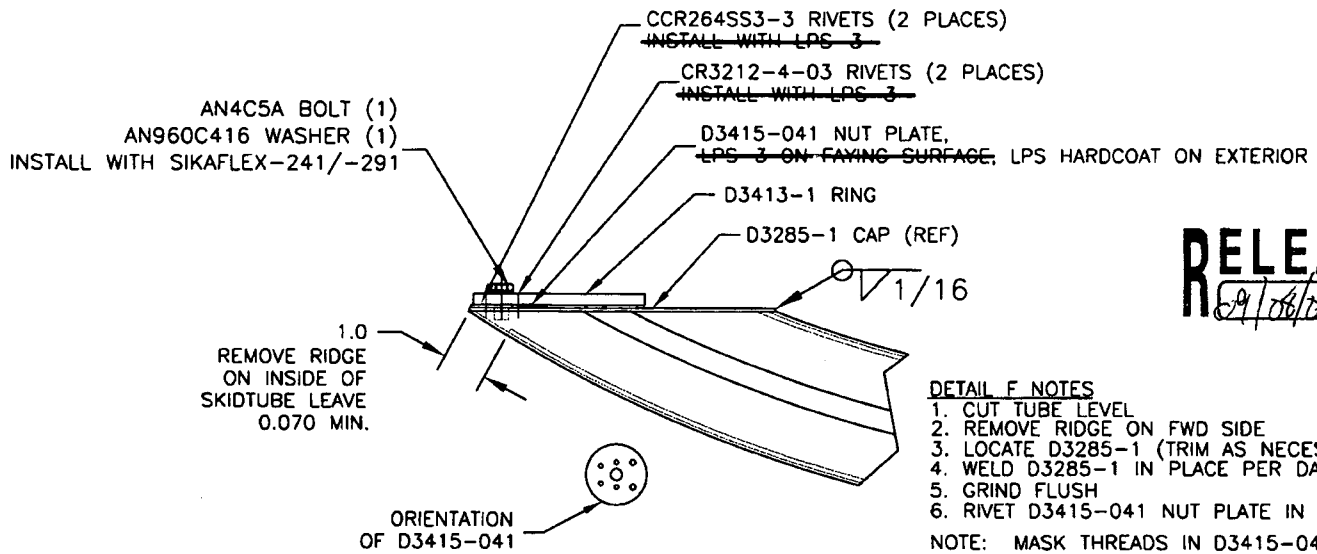

RELEASED 09/06/23

DETAIL F NOTES
1. CUT TUBE LEVEL
2. REMOVE RIDGE ON FWD SIDE
3. LOCATE D3285-1 (TRIM AS NECESSARY)
4. WELD D3285-1 IN PLACE PER DART QSI 004
5. GRIND FLUSH
6. RIVET D3415-041 NUT PLATE IN PLACE

NOTE: MASK THREADS IN D3415-041 PRIOR TO FINISH

COPYRIGHT © 2009 BY DART AEROSPACE USA, INC
THIS DOCUMENT IS PRIVATE AND CONFIDENTIAL AND IS SUPPLIED ON THE EXPRESS CONDITION THAT IT IS NOT TO BE USED FOR ANY PURPOSE OR COPIED OR COMMUNICATED TO ANY OTHER PERSON WITHOUT WRITTEN PERMISSION FROM DART AEROSPACE USA, INC.

Dart Aerospace Ltd

W/O:		WORK ORDER CHANGES					
DATE	STEP	PROCEDURE CHANGE	By	Date	Qty	Approval Chief Eng / Prod Mgr	Approval QC Inspector

Part No: _____ **PAR #:** _____ **Fault Category:** _____ **NCR:** Yes No **DQA:** _____ **Date:** _____

Resolution: _____ **Disposition:** _____ **QA: N/C Closed:** _____ **Date:** _____

NCR:		WORK ORDER NON-CONFORMANCE (NCR)						
DATE	STEP	Description of NC Section A	Corrective Action Section B			Verification Section C	Approval Chief Eng	Approval QC Inspector
			Initial Chief Eng	Action Description Chief Eng	Sign & Date			

NOTE: Date & initial all entries

H:\fFORMS\Quality Assurance\approved QA\NCRWO RevE